Rev 12/2025

SUMMIT

SURT-025

ROOF BAR
DYNAMIC
MAX WEIGHT
LOAD 75 KG

Brand & Model		31
AUDI A4 & S4(B6)	4	2000-> 2004
CITROEN Ax	5	1986 -> 1998
CITROEN C1 II	5	2014 ->
CITROEN Saxo	5	1996 -> 2005
DAIHATSU Terios	5	1997 -> 2005
HYUNDAI i20	5	2008-> 2014
KIA Picanto (TA)	5	2011 -> 2017
FORD Fiesta IV	5	1995 -> 2002
MAZDA 121 (JASM-JBSM)	5	1996 -> 2001
MERCEDES Classe A (S168 & W168)	5	1997 -> 2004
NISSAN Micra (K11)	5	1992 -> 2003
PEUGEOT 106	5	1991 -> 2003
PEUGEOT 108	5	2014 ->
PEUGEOT 205	5	1983 -> 1998
SEAT Ibiza (021A)	5	1984 -> 1993
SUZUKI Alto (SS)	3-5	1982 -> 1985
SUZUKI Alto (CA-CL-HA)	5	1986 -> 2002
TOYOTA Aygo (AB40)	5	2014 ->
TOYOTA Aygo X	5	2022 - >

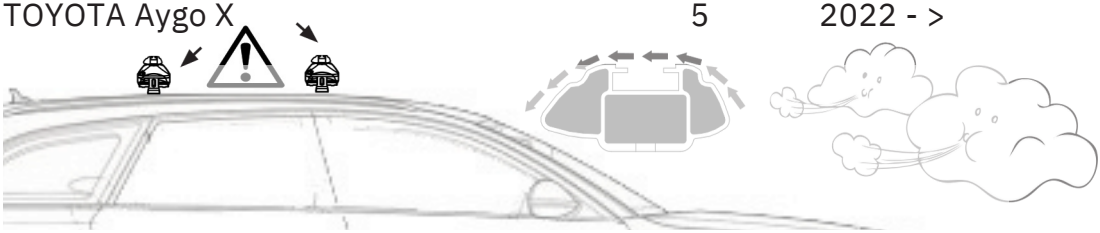

Roof bar images are for illustration purposes only.

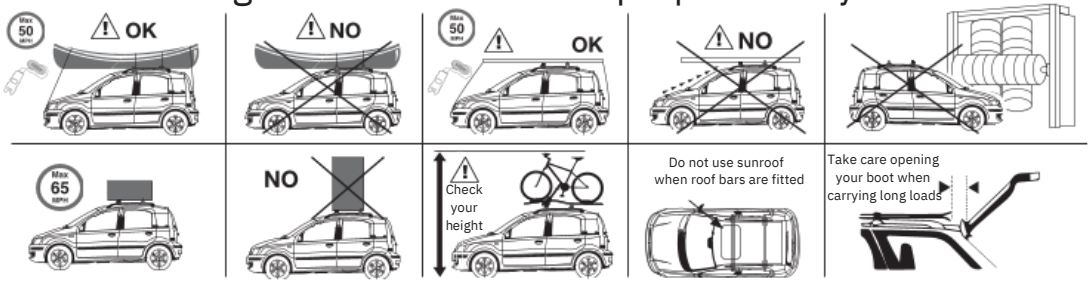

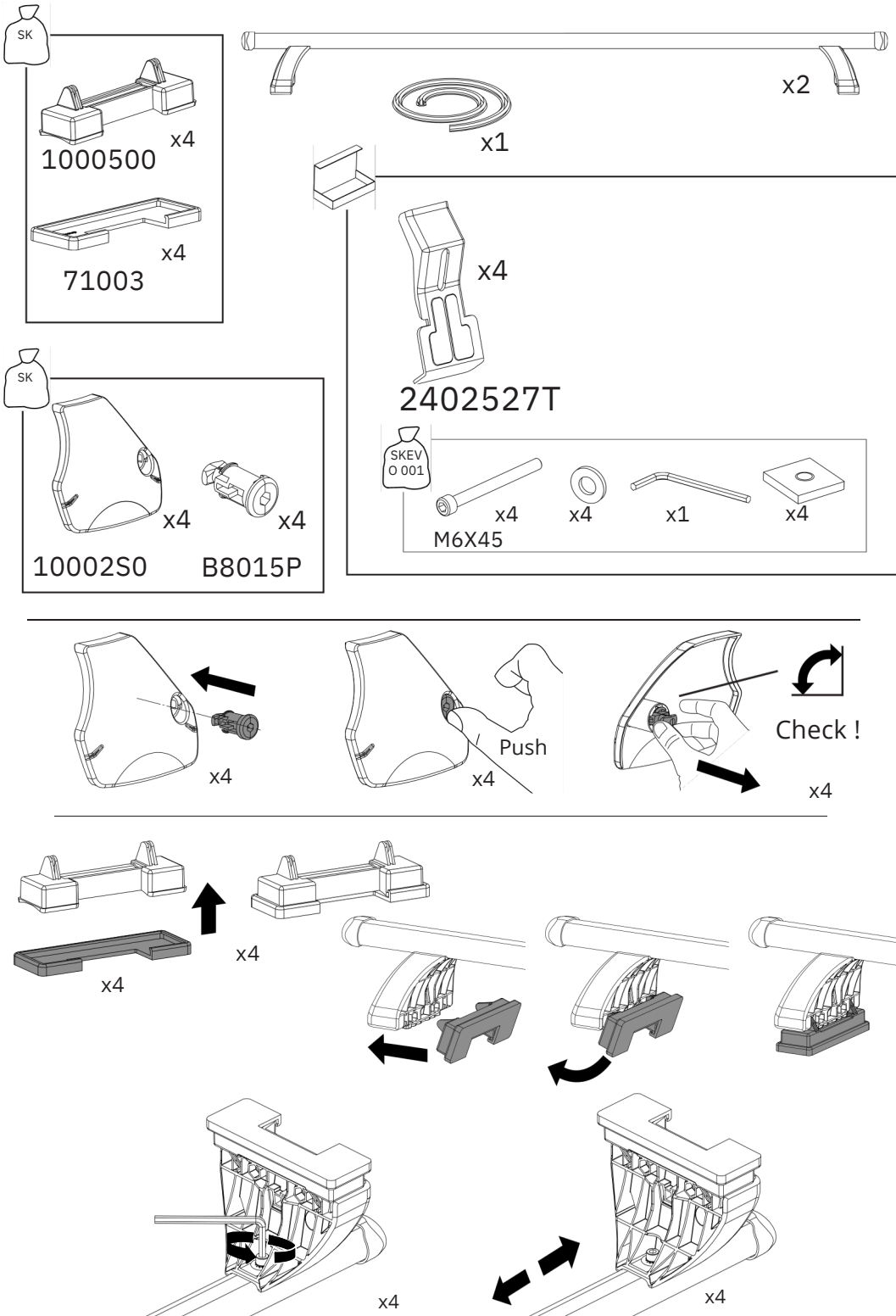
SK
x4
1000500
x4
71003
x2
x1
x4
2402527T
SKEV
O 001
x4
M6X45
x4
x1
x4
SK
x4
10002S0
x4
B8015P
x4
Push
x4
Check !
x4
x4
x4
x4
x4
x4

You must follow the measurements indicated in this table for your vehicle. Failure to follow these measurements will result in incorrect fitment of your roof bars, which will invalidate your warranty.

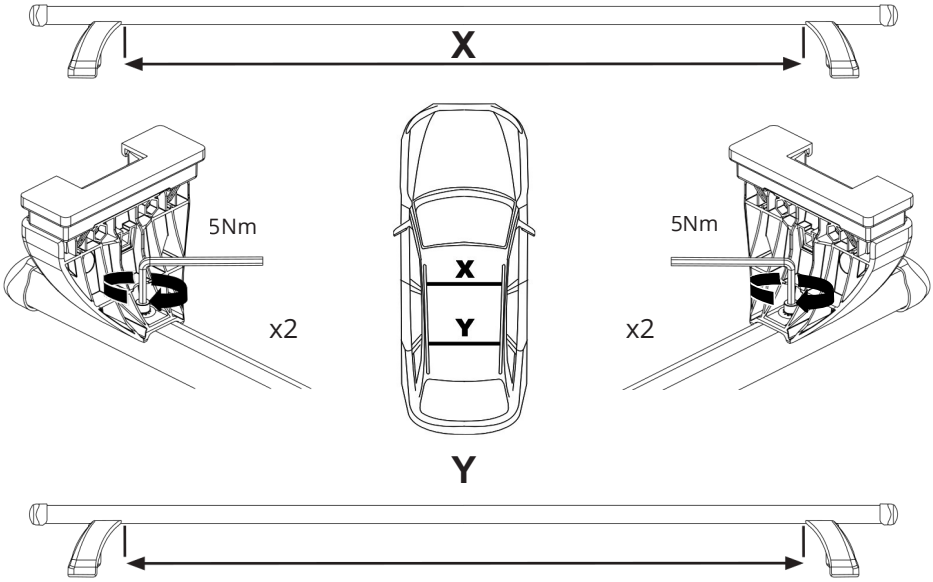

BRAND	MODEL	YEAR	DOOR	X	Y	A	B
AUDI	A4 & S4	2000->2004	4	96 cm	94 cm	28 cm	68 cm
CITROEN	Ax	1986->1998	5	91 cm	94 cm	25 cm	60 cm
CITROEN	C1 II	2014 ->	5	97,5 cm	97 cm	27,5 cm	60 cm
CITROEN	Saxo	1996->2005	5	84 cm	84 cm	20 cm	60 cm
DAIHATSU	Terios	1997->2005	5	90,5 cm	90,5 cm	35 cm	70 cm
HYUNDAI	i20	2008->2014	5	100 cm	94 cm	25 cm	63 cm
KIA	Picanto	2011->2017	5	97,5 cm	96 cm	30 cm	60 cm
FORD	Fiesta IV	1995->2002	5	91 cm	89 cm	28 cm	70 cm
MAZDA	121	1996->2001	5	91 cm	89 cm	28 cm	70 cm
NISSAN	Micra II	1992->2003	5	88 cm	88 cm	25 cm	60 cm
MERCEDES	Classe A	1997->2004	5	100 cm	97 cm	15 cm	70 cm
PEUGEOT	106	1991->2003	5	84 cm	84 cm	20 cm	60 cm
PEUGEOT	108	2014 ->	5	97,5 cm	97 cm	27,5 cm	60 Cm
PEUGEOT	205	1983->1998	5	86,5 cm	86,5 cm	30 cm	60 cm
SEAT	Ibiza I	1984->1993	5	91,5 cm	91,5 cm	20 cm	60 cm
SUZUKI	Alto I	1982->1985	3-5	91,5 cm	91,5 cm	30 cm	60 cm
SUZUKI	Alto II-III	1986->2002	5	91,5 cm	91,5 cm	30 cm	60 cm
TOYOTA	Aygo	2014 ->	5	97,5 cm	95 cm	27,5 cm	60 cm
TOYOTA	Aygo X	2022 ->	5	97 cm	90.5 cm	33 cm	60 cm

You must follow the measurements indicated in this table for your vehicle. Failure to follow these measurements will result in incorrect fitment of your roof bars, which will invalidate your warranty.

X measurement: Position of the feet on the front bar - you need the front of the feet to line up to this measurement.
Y measurement: Position of the feet on the rear bar - you need the front of the feet to line up to this measurement.
A measurement: Position of the front bar feet on the roof, measured from the centre of the A pillar to the centre of the roof bar foot.
B measurement: Position of the rear bar feet on the roof, measured from the centre of the front roof bar foot to the centre of the rear roof bar foot.

Measure the gaps around the feet and carefully cut the weather strip to size.
Tip: try to cut this as precisely as possible, to stop any noise from wind.

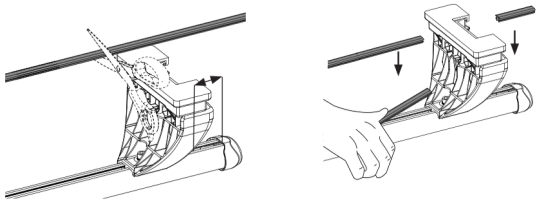

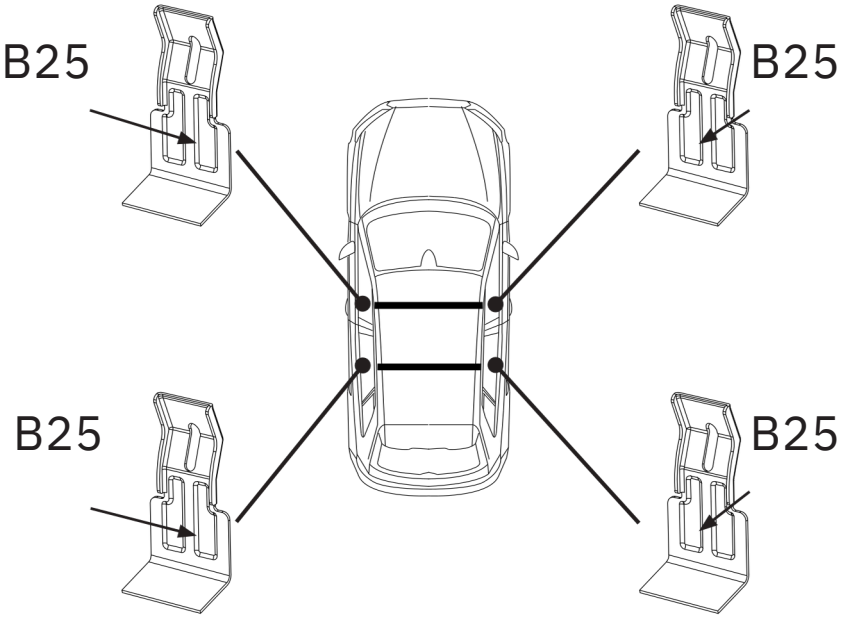

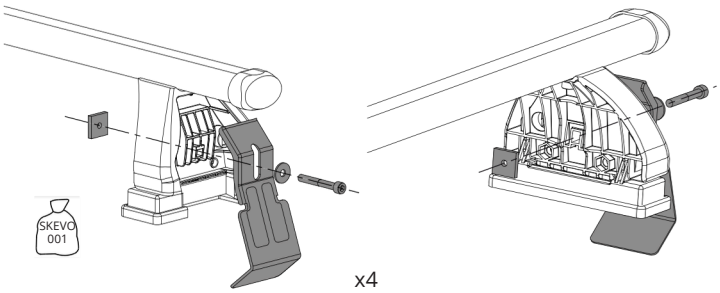

Front bar: Measure from the middle of the A pillar to the centre of the roof bar foot.

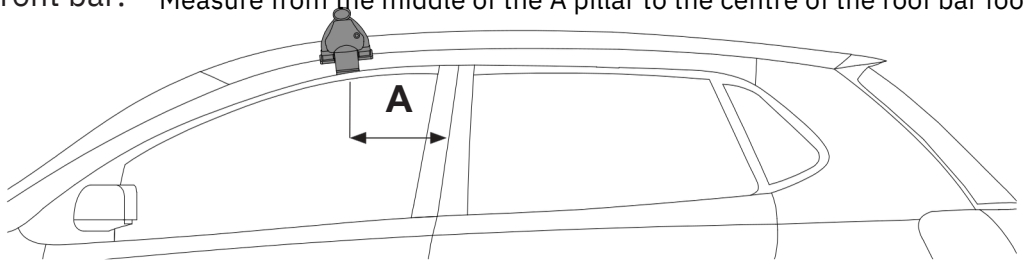

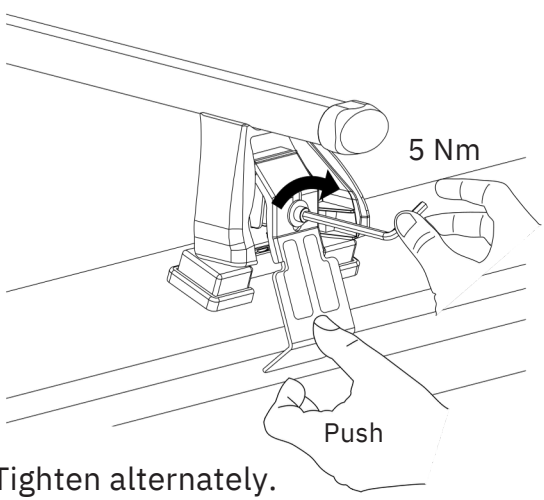

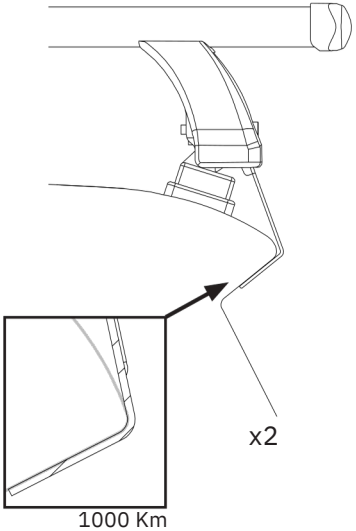

Tighten alternately.

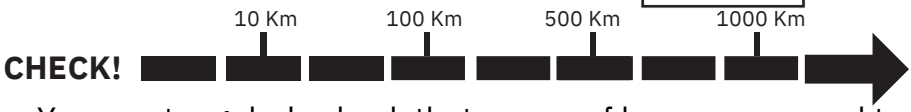

You must regularly check that your roof bars are secured to the correct Nm. We strongly recommend that you check & retighten your roof bars after the initial fitting, after adding & securing a load, before and during your journey.

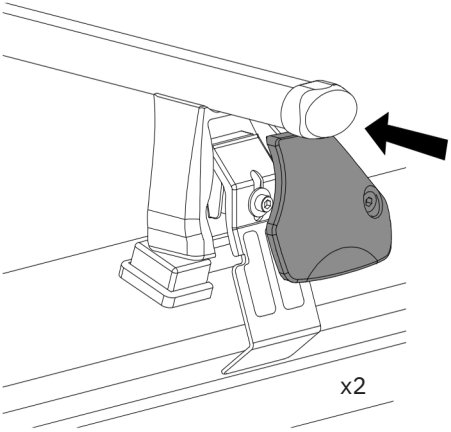

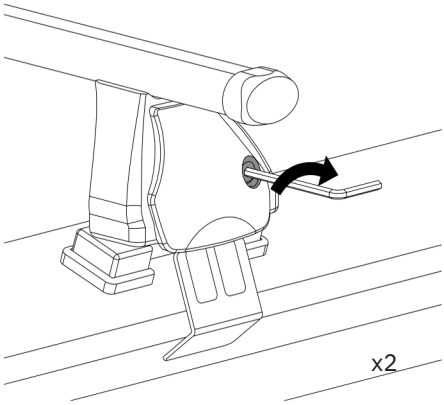

Rear bar: Measure from the centre of the roof bar feet.

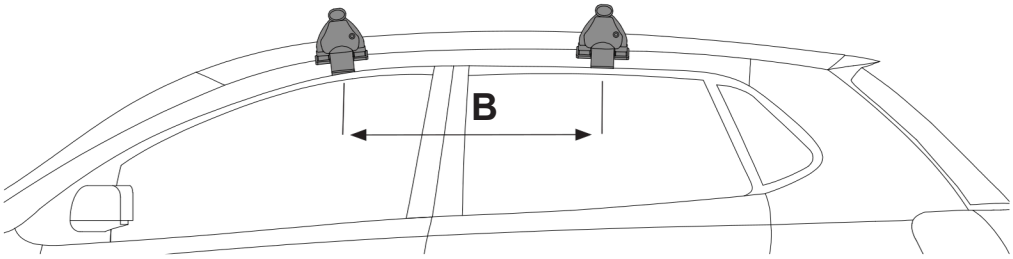

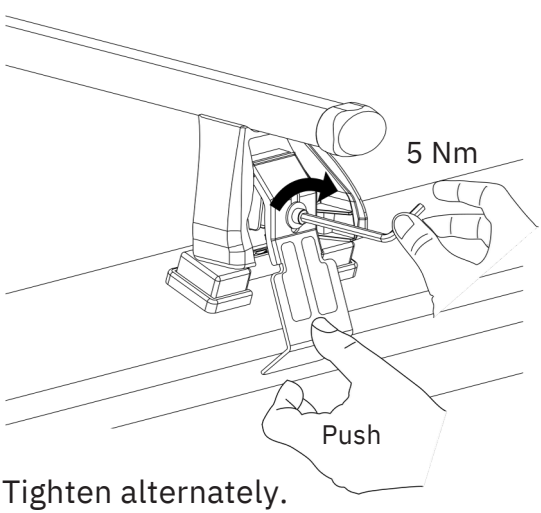

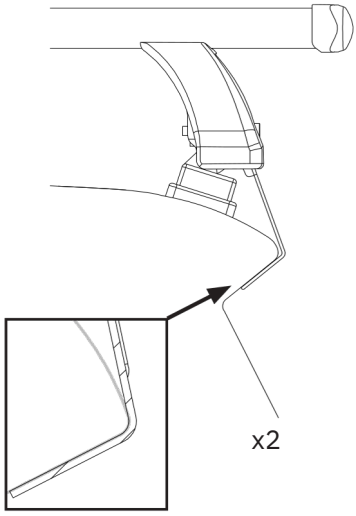

Tighten alternately.

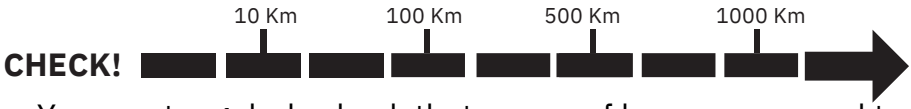

You must regularly check that your roof bars are secured to the correct Nm. We strongly recommend that you check & retighten your roof bars after the initial fitting, after adding & securing a load, before and during your journey.

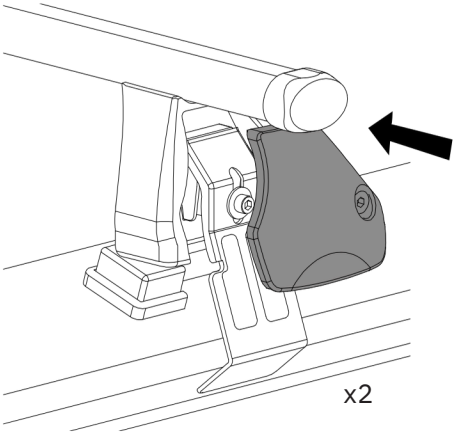

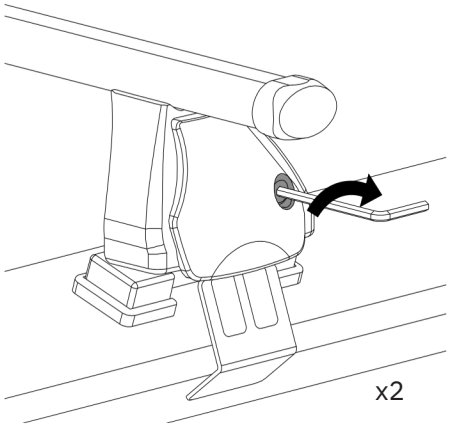

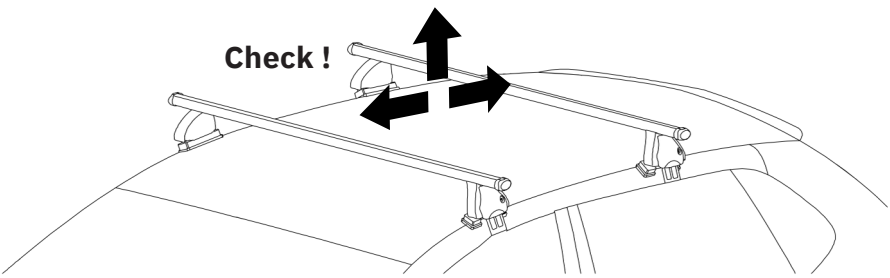

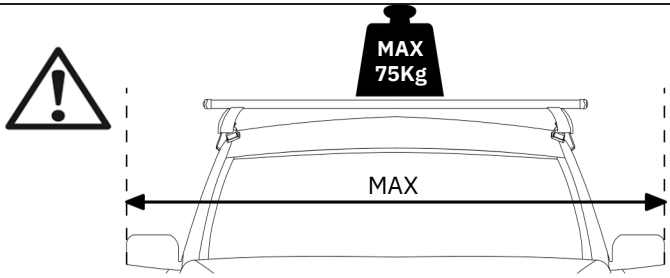

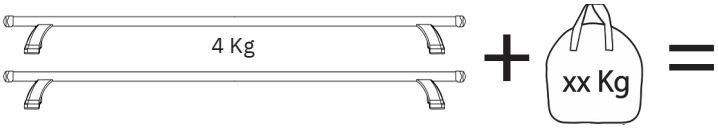

Check the vehicle handbook for the maximum permitted load. If the vehicle handbook states lower than 75kg, that must be observed, if more than 75kg the bar maximum dynamic weight must not be exceeded.

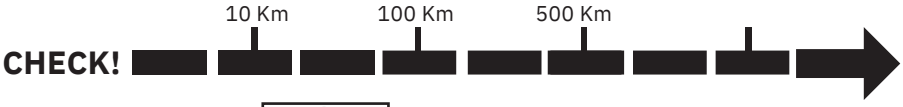

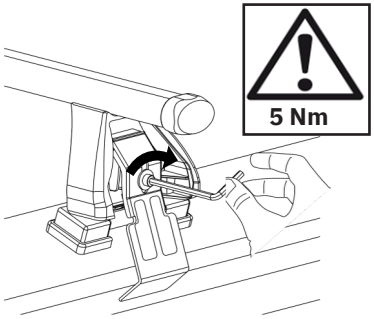

You must regularly check that your roof bars are secured to the correct Nm. We strongly recommend that you check & retighten your roof bars after the initial fitting, after adding & securing a load, before and during your journey.

It is your responsibility to ensure that your roof bars & any roof load are correctly & securely fitted to your vehicle.

Installation Notes:

• Fit the roof bars according to these instructions only. Do not assemble or use this product unless you have understood the fitting instructions. Check that all the necessary parts are included.
• Check and make sure that all fastening parts are fixed securely. Please check also that the load is fastened properly by pushing and pulling it. Recheck regularly as recommended in these instructions.

Important Safety Notes:

• Please retain these instructions future reference.
• The maximum dynamic load evenly distributed over the full width of the bar with a low centre of gravity is 75kg (including the weight of the bars; approx. 4kg). Check the vehicle handbook for the maximum permitted load. If the vehicle hand book states a maximum of less than 75kg, then that is the maximum permissible load. If the vehicle handbook states a maximum heavier than 75kg, the maximum dynamic load for these roof bars is still 75kg - and this must not be exceeded.
• It is your responsibility to ensure that all loads are correctly and safely secured using suitable fixing methods (e.g. strong webbing straps with buckles). Where specialised accessories are available, they should be used (e.g. Cycle Carriers, Ski Holders, etc). If small heavy loads are being carried, load to one side of the bar, not the middle. **Never attach any loads to any roof bars using bungee cords or elasticated straps.**
• Before driving and at regular intervals during your journey, check that all securing screws, clamping devices and foot attachments are fully tightened, in accordance with these instructions. Additionally ensure the load is fastened correctly. We recommend a short test drive immediately after fitting any loads, you must then check & if required retighten your roof bars & any load.
• After covering a short distance, all securing devices of both the load and the roof bars must be checked and tightened as required. This needs to be repeated at regular intervals as recommended in these instructions.
• To prevent damage or discolouration to the paint under the foot pack rubber, we recommend cleaning the roof bar feet and the vehicle roof prior to fitment. The roof bars should be removed when not in use.
• Neither the roof bars or the load should project beyond the maximum profile of the vehicle.
• Take care not to drive into low places such as garages or multi-storey carparks when carrying a high load, particularly cycles. Do not drive through an automatic car wash with the roof bars mounted on the vehicle. **When carrying long loads take care when opening the boot to not hit the boot lid onto the load.**
• Please note that some antennas can interfere with roof bars or loads when installed and should be removed, where possible.
• Sunroofs should not be used when roof bars are fitted.
• Follow the instructions thoroughly and do not jump ahead in the sequence (1,2,3, A,B,C... etc).
• **It is your responsibility to ensure that your roof bars & any loads are correctly & securely fitted to your vehicle.**

• Using the bars, especially when carrying a load, will affect the driving and braking characteristics of your car. Larger roof loads may also affect your car's sensitivity to cross winds. For safety reasons, the vehicle must not be driven at maximum speeds. Speed should be matched to the load being transported, to prevailing conditions including the state of the road, the quality of the road surface, the volume of traffic, etc., and of course any speed restrictions in force. We recommend a maximum speed of 65 mph, but the vehicle speed when transporting a load of any kind must be matched to the prevailing conditions.
• Surfboards, boats and large flat objects may produce damaging aerodynamic forces to the vehicle. We therefore recommend travelling at much reduced speed when carrying these articles. **Where two or more surfboards are carried (or similar items which may produce lifting forces) they should not be carried side by side, but should be stacked one upon the other. All long, flat objects should be secured independently to the front and rear of the vehicle using straps which are capable of withstanding the lifting forces - do not use bungee cords or elasticated straps.**
• **When carrying kayaks or canoes ensure that they are secured to the bars and also the front and rear of the vehicle in the upright position.**
• If you are using these roof bars during the winter months, they must be kept clean and properly maintained, all dirt and salt must be removed. Bolts, screws and nuts should be lubricated at regular intervals, the periodic use of a spray lubricant will keep any lock barrels working freely.
• Always fit the roof bars in accordance with these instructions. The spacing between the front and rear bars must never be less than 700 mm, except where the vehicle mountings determine the spacing.
IMPORTANT: These roof bars are specifically designed for your car model. Please therefore check which roof bar is needed when changing your car.
Do not use spare parts from other products.

The manufacturer takes no responsibility for damage caused by an incorrectly fitted roof bar.



Made in Italy by
Aurilis Group Italia SRL,
Via Torino 101 Fossano (CN) - Italy
On behalf of
Mountney Ltd
MXL Centre, 6 Lombard Way, Banbury, OX16 4TJ, UK
www.mountneyltd.com

EU Rep.
Authorised Rep Compliance Ltd., Ground Floor, 71 Lower Baggot Street, Dublin, D02 P593, Ireland.
www.arccompliance.com